BFP-2 DOMESTIC BACKFLOW PREVENTER

ES-LF009

For Health Hazard Applications

Job Name _____ Contractor _____

Job Location _____ Approval _____

Engineer _____ Contractor's P.O. No. _____

Approval _____ Representative _____

LEAD FREE*

Series LF009

Reduced Pressure Zone Assemblies

Sizes: ¼" – 3" (8 – 80mm)

Series LF009 Reduced Pressure Zone Assemblies are designed to protect potable water supplies in accordance with national plumbing codes and water authority requirements. This series can be used in a variety of installations, including the prevention of health hazard cross-connections in piping systems or for containment at the service line entrance.The LF009 features Lead Free* construction to comply with Lead Free* installation requirements.

This series features two in-line, independent check valves, captured springs and replaceable check seats with an intermediate relief valve. Its compact modular design facilitates easy maintenance and assembly access. Sizes ¼" – 1" (8 – 25mm) shutoffs have tee handles.

Features

- Single access cover and modular check construction for ease of maintenance
- Top entry - all internals immediately accessible
- Captured springs for safe maintenance
- Internal relief valve for reduced installation clearances
- Replaceable seats for economical repair
- Lead Free* cast copper silicon alloy body construction for durability ¼" – 2" (8 – 50mm)
- Fused epoxy coated cast iron body 2½" and 3" (65 and 80mm)
- Ball valve test cocks — screwdriver slotted ¼" – 2" (8 – 50mm)
- Large body passages provides low pressure drop
- Compact, space saving design
- No special tools required for servicing

Specifications

A Reduced Pressure Zone Assembly shall be installed at each potential health hazard location to prevent backflow due to backsiphonage and/or backpressure. The assembly shall consist of an internal pressure differential relief valve located in a zone between two positive seating check modules with captured springs and silicone seat discs. Seats and seat discs shall be replaceable in both check modules and the relief valve. There shall be no threads or screws in the waterway exposed to line fluids. Service of all internal components shall be through a single access cover secured with stainless steel bolts. Body and shutoffs shall be constructed using Lead Free* cast copper silicon alloy materials. Lead Free* reduced pressure zone assembly shall comply with state codes and standards, where applicable, requiring reduced lead content.

The assembly shall also include two resilient seated isolation valves, four resilient seated test cocks and an air gap drain fitting. The assembly shall meet the requirements of: USC; ASSE Std. 1013; AWWA Std. C511; CSA B64.4. Shall be a Watts Series LF009.

LF009

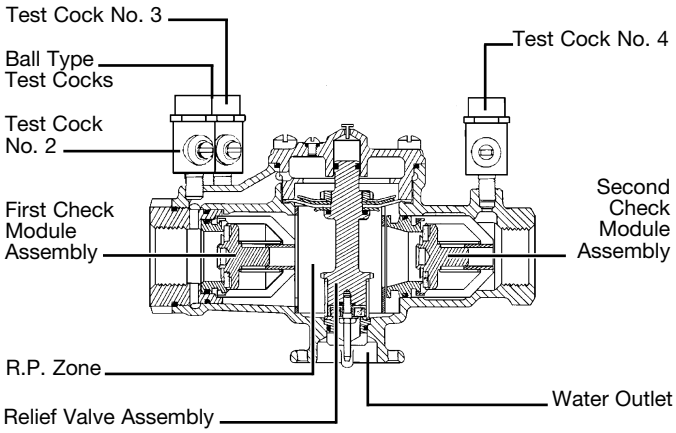

Now Available
WattsBox Insulated Enclosures.
For more information, send for literature ES-WB.

NOTICE

Inquire with governing authorities for local installation requirements

NOTICE

The information contained herein is not intended to replace the full product installation and safety information available or the experience of a trained product installer. You are required to thoroughly read all installation instructions and product safety information before beginning the installation of this product.

***The wetted surface of this product contacted by consumable water contains less than 0.25% of lead by weight.**

Watts product specifications in U.S. customary units and metric are approximate and are provided for reference only. For precise measurements, please contact Watts Technical Service. Watts reserves the right to change or modify product design, construction, specifications, or materials without prior notice and without incurring any obligation to make such changes and modifications on Watts products previously or subsequently sold.

WATTS®

BFP-2 DOMESTIC BACKFLOW PREVENTER

Available Models: ¼" – 2" (8 – 50mm)

Suffix:

QT – quarter-turn ball valves
S – strainer
LF – without shutoff valves
PC – internal polymer coating

Prefix:

U – union connections

Available Models: 2½" – 3" (65 – 80mm)

Suffix:

NRS – non-rising stem resilient seated gate valves
OSY – UL/FM outside stem and yoke resilient seated gate valves
S-FDA – FDA epoxy coated strainer
QT-FDA – FDA epoxy coated quarter-turn ball valves
LF – without shutoff valves

Note: The installation of a drain line is recommended. When installing a drain line, an air gap is necessary (see ES-AG).

Materials: ¼" – 2" (8 – 50mm)

Lead Free* cast copper silicon alloy body construction, silicone rubber disc material in the first and second check plus the relief valve. Replaceable polymer check seats for first and second checks. Removable stainless steel relief valve seat. Stainless steel cover bolts.

Standardly furnished with NPT body connections.
Model LF009QT furnished with quarter-turn, full port, resilient seated, Lead Free* cast copper silicon alloy body ball valve shutoffs.

Materials: 2½" and 3" (65 – 80mm)

- (FDA approved) Epoxy coated cast iron unibody with plastic seats
- Relief valve with stainless steel seat and trim
- Lead Free cast copper silicon alloy body ball valve test cocks

Pressure / Temperature

Sizes ¼" – 2" (8 – 50mm) Suitable for supply pressure up to 175psi (12 bar). Water temperature: 33°F – 180°F (0.5° – 75°C).

Sizes 2½" and 3" (65 and 80mm) are suitable for supply pressures up to 175psi (12.1 bar) and water temperature at 110°F (43°C) continuous, 140°F (60°C) intermittent.

Standards

USC
ASSE No. 1013
AWWA C511
CSA B64.4
IAPMO File No. 1563.

Approvals

ASSE, AWWA, CSA, IAPMO

Approved by the Foundation for Cross-Connection Control and Hydraulic Research at the University of Southern California.

Approval models QT, PC, NRS, OSY.

UL Classified
2½" and 3" (65 and 80mm) with OSY gate valves.
¾" - 2" (20-50mm) without shutoff valves (-LF) (except LF009M3LF)

Air Gaps and Elbows

MODEL		DRAIN OUTLET		DIMENSIONS				WEIGHT	
	for 909, 009 and 993 sizes			A		B			
		in.	*mm*	*in.*	*mm*	*in.*	*mm*	*lbs.*	*kgs.*
909AGA	¼"–½" 009, ¾" 009M2/M3	½	13	2⅜	60	3⅛	79	0.625	0.28
909AGC	¾"–1" 009/909, 1"–1½" 009M2	1	25	3¼	83	4⅞	124	1.5	0.68
909AGF	1¼"–2" 009M1, 1¼"–3" 009/909, 2" 009M2, 4"–6" 993	2	51	4⅜	111	6¾	171	3.25	1.47
909AGK	4"–6" 909, 8"–10" 909M1	3	76	6⅜	162	9⅝	244	6.25	2.83
909AGM	8"–10" 909	4	102	7⅜	187	11¼	286	15.5	7.03
909ELA	¼"–½" 009, ¾" 009M2/M3	–	–	–	–	–	–	–	–
909ELC	¾"–1" 009/909	–	–	2⅜	60	2⅜	60	0.38	0.17
* 909ELF	1¼"-2" 009M1, 1¼"–2" 009/909, 2" 009M2, 4"–6" 993	–	–	3⅝	92	3⅝	92	2	0.91
* 909ELH Vertical	2½"–3" 009/909	–	–	–	–	–	–	–	–

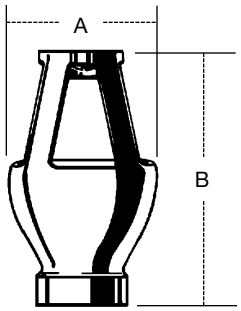

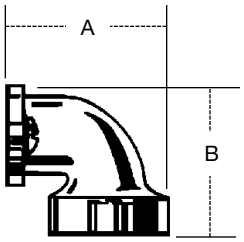

BFP-2 DOMESTIC BACKFLOW PREVENTER

Dimensions and Weight: ¼" – 2" (8 – 50mm) LF009

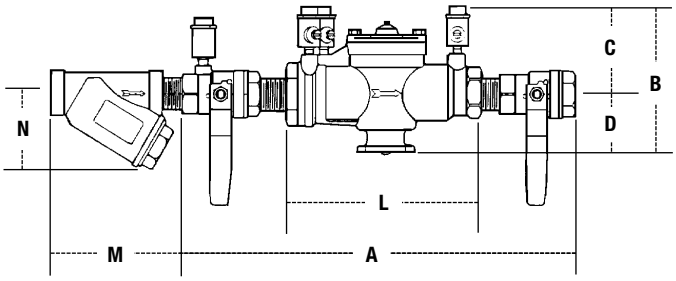

LF009 ¼" – 2"

SIZE (DN)		DIMENSIONS (APPROX.)														WEIGHT	
		A		B		C		D		L		M		N			
in.	mm	in.	mm	in.	mm	in.	mm	in.	mm	in.	mm	in	mm	in	mm	lbs.	kgs.
¼	8	10	250	4⅝	117	3⅜	86	1¼	32	5½	140	2⅜	60	2½	64	5	2
⅜	10	10	250	4⅝	117	3⅜	86	1¼	32	5½	140	2⅜	60	2½	64	5	2
½	15	10	250	4⅝	117	3⅜	86	1¼	32	5½	140	2¾	70	2¼	57	5	2
¾	20	10¾	273	5	127	3½	89	1½	38	6¾	171	3 3/16	81	2¾	70	6	3
1	25	14½	368	5½	140	3	76	2½	64	9½	241	3¾	95	3	76	12	5
1¼	32	17⅜	441	6	150	3½	89	2½	64	11⅜	289	4 7/16	113	3½	89	15	6
1½	40	17⅞	454	6	150	3½	89	2½	64	11⅛	283	4⅞	124	4	102	16	7
2	50	21⅜	543	7¾	197	4½	114	3¼	83	13½	343	5 5/16	151	5	127	30	13

Dimensions and Weight: 2½" and 3" (65 and 80mm) LF009

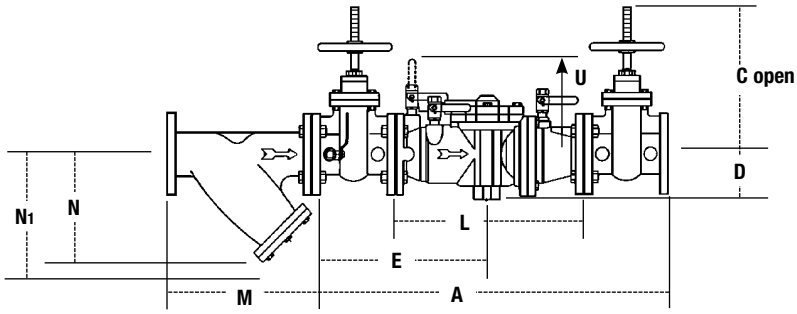

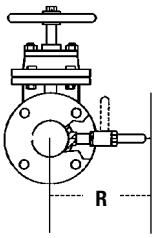

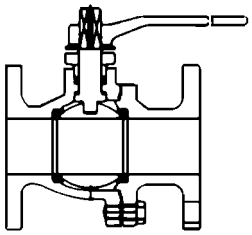

Watts G-4000 Series
QT – Ball Valves

STRAINER SIZE		DIMENSIONS (APPROX.)						WEIGHT	
		M		N		N1†			
in.	mm	in.	mm	in.	mm	in.	mm	lbs.	kgs.
2½	65	10	254	6½	165	9¾	248	28	12.7
3	80	10⅛	257	7	178	10	254	34	15.4

†Clearance for servicing

MODEL	SIZE DN		DIMENSIONS (APPROX.)														WEIGHT	
			A		C		D		E		L		R		U			
	in.	mm	in.	mm	in.	mm	in.	mm	in.	mm	in.	mm	in.	mm	in.	mm	lbs.	kgs.
LF009LF	2½	65	—	—	—	—	4½	114	—	—	18⅛	460	—	—	10⅝	270	76	34.5
LF009OSY	2½	65	33¼	845	15⅞	403	4½	114	16⅜	416	18⅛	460	7¾	197	10⅝	270	166	75.3
LF009NRS	2½	65	33¼	845	11⅜	289	4½	114	16⅜	416	18⅛	460	7¾	197	10⅝	270	161	73.0
LF009QTFDA	2½	65	33¼	845	6	152	4½	114	16⅜	416	18⅛	460	7¾	197	10⅝	270	150	68.0
LF009LF	3	80	—	—	—	—	4½	114	—	—	18⅛	460	—	—	10⅝	270	76	34.5
LF009OSY	3	80	34¼	870	18½	470	4½	114	16⅝	422	18⅛	460	8¾	222	10⅝	270	198	89.8
LF009NRS	3	80	34¼	870	12¾	324	4½	114	16⅝	422	18⅛	460	8¾	222	10⅝	270	191	86.6
LF009QTFDA	3	80	34¼	870	7	178	4½	114	16⅝	422	18⅛	460	8¾	222	10⅝	270	158	71.7

BFP-2 DOMESTIC BACKFLOW PREVENTER

Capacity

Performance as established by an independent testing laboratory.

*Typical maximum system flow rate (7.5 feet/sec., 2.3 meters/sec.)

¼" (8mm) LF009QT

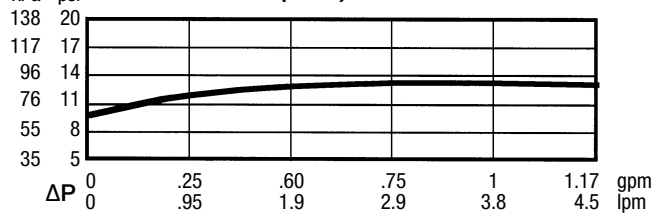

⅜" (10mm) LF009QT

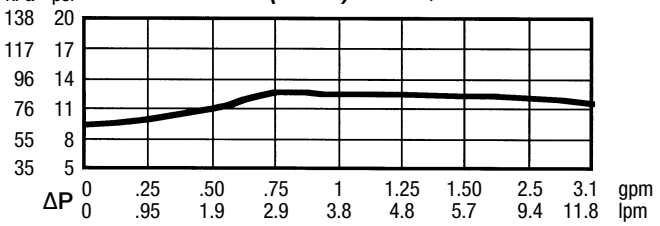

½" (15mm) LF009QT

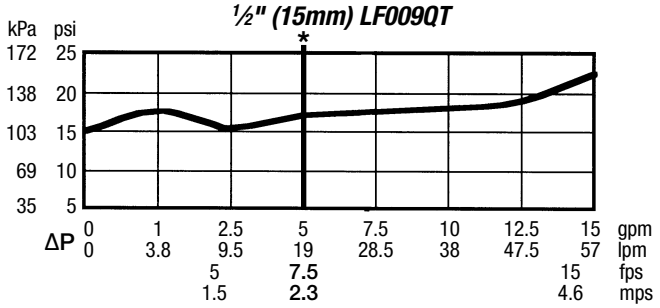

¾" (20mm) LF009M3QT

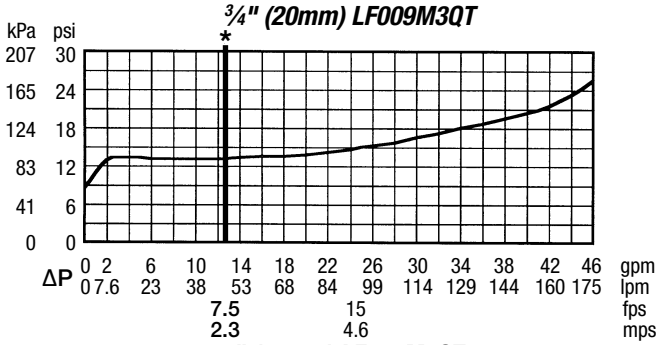

1" (25mm) LF009M2QT

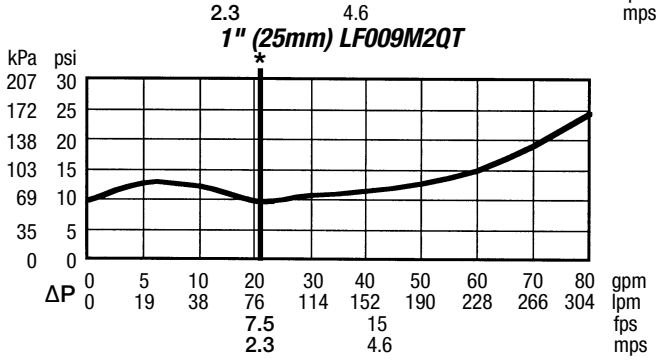

1¼" (32mm) LF009M2QT

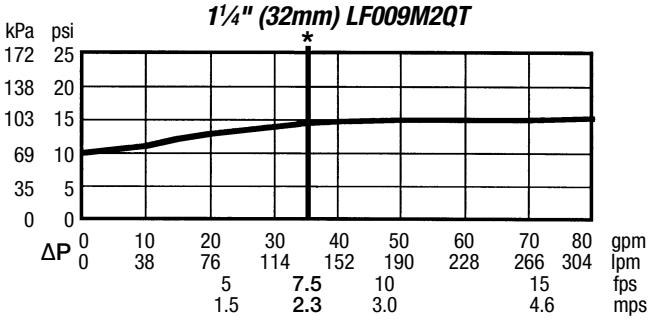

1½" (40mm) LF009M2QT

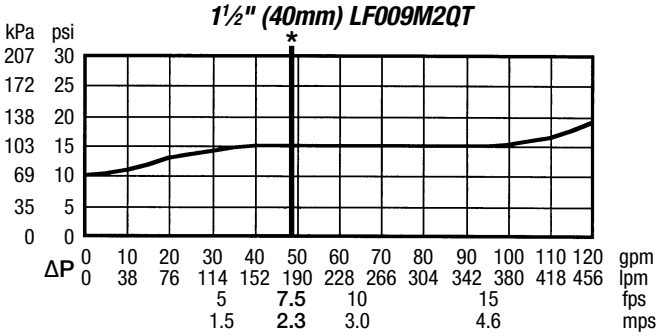

2" (50mm) LF009M2QT

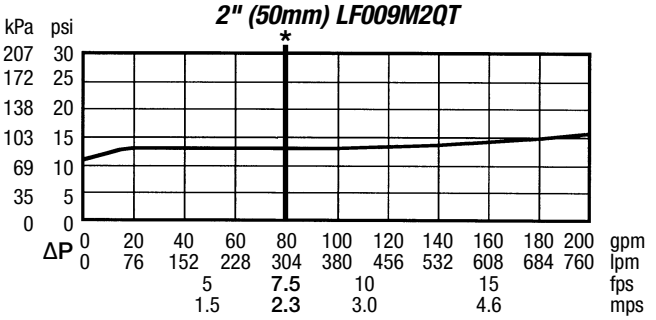

2½" (65mm) LF009

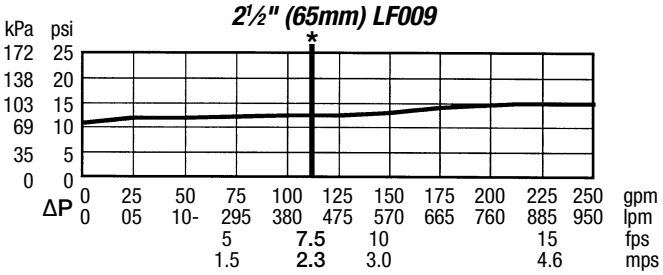

3" (80mm) LF009

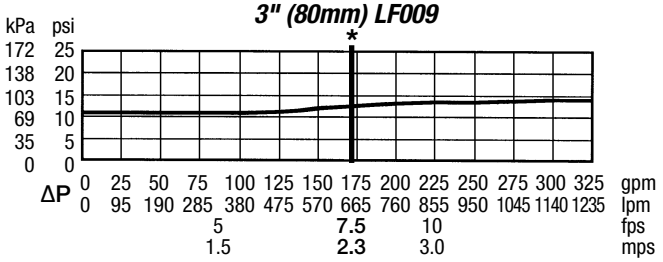

WATTS®

A Watts Water Technologies Company

ISO 9001-2008 CERTIFIED

USA: Tel: (978) 688-1811 • Fax: (978) 794-1848 • www.watts.com
Canada: Tel: (905) 332-4090 • Fax: (905) 332-7068 • www.watts.ca

© 2014 Watts